DFL2

BL Flexform

Flexible, Linear LED Strip Lighting
Monochromatic, Line Voltage

BL LIGHTING SINCE 1986

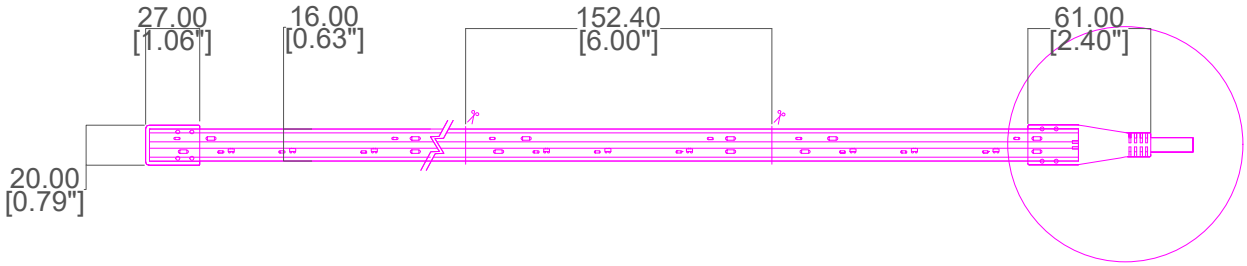

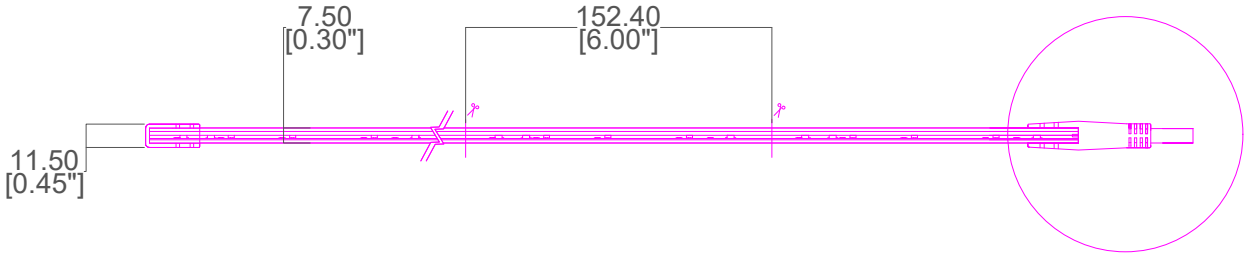

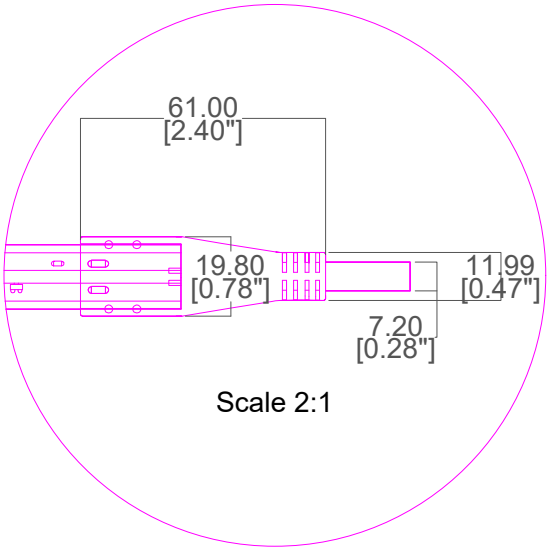

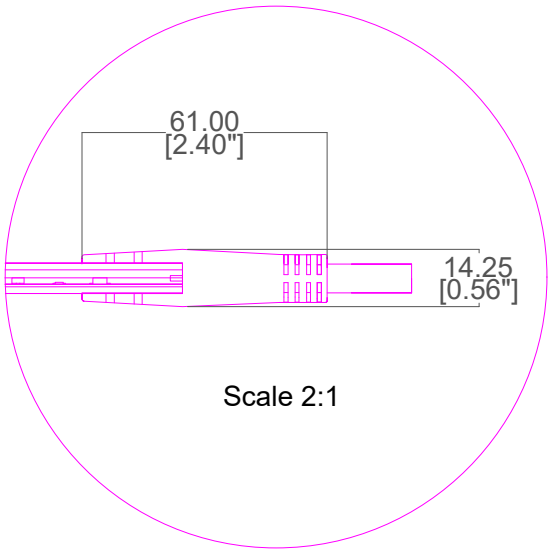

CAD Drawing subject to change without notice.

BL LIGHTING
ILLUMINATE EVERYTHING
111 - 8838 Heather St. Vancouver, BC. Canada. V6P 3S8
P: 1-604-874-4405 E: info@bllighting.com
Copyright © BL INNOVATIVE LIGHTING. All Rights Reserved.

For more information, please download the BL LIGHTING catalog

bllighting.com