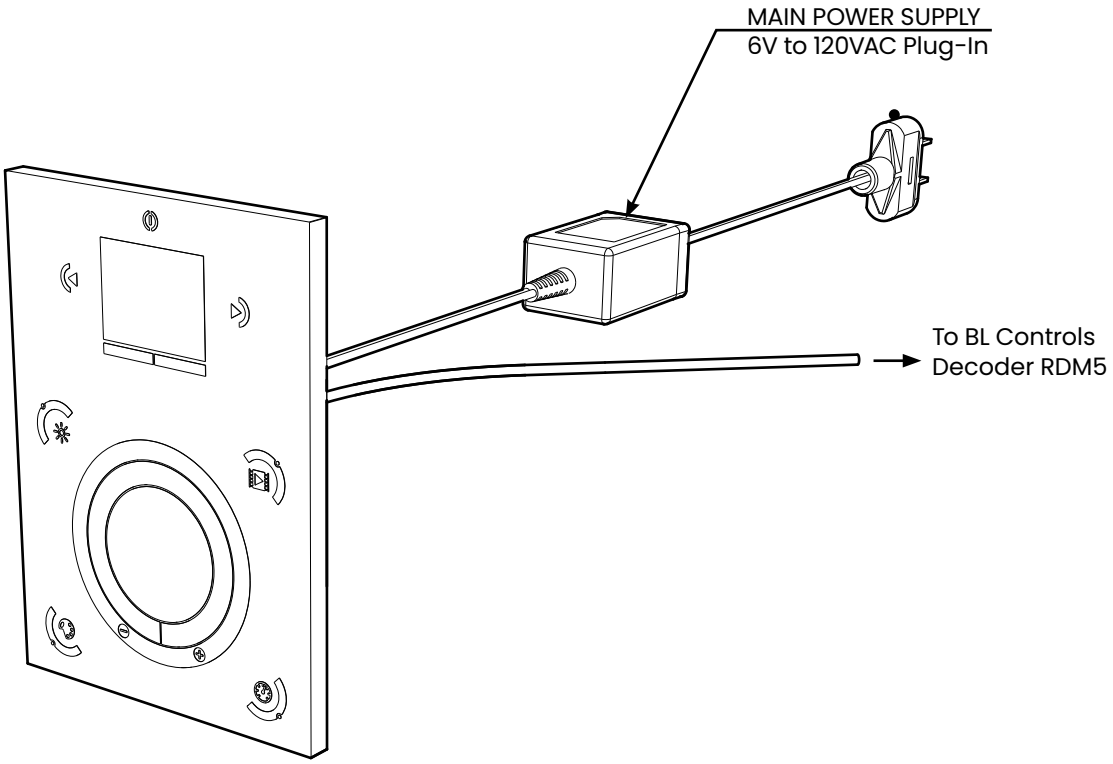

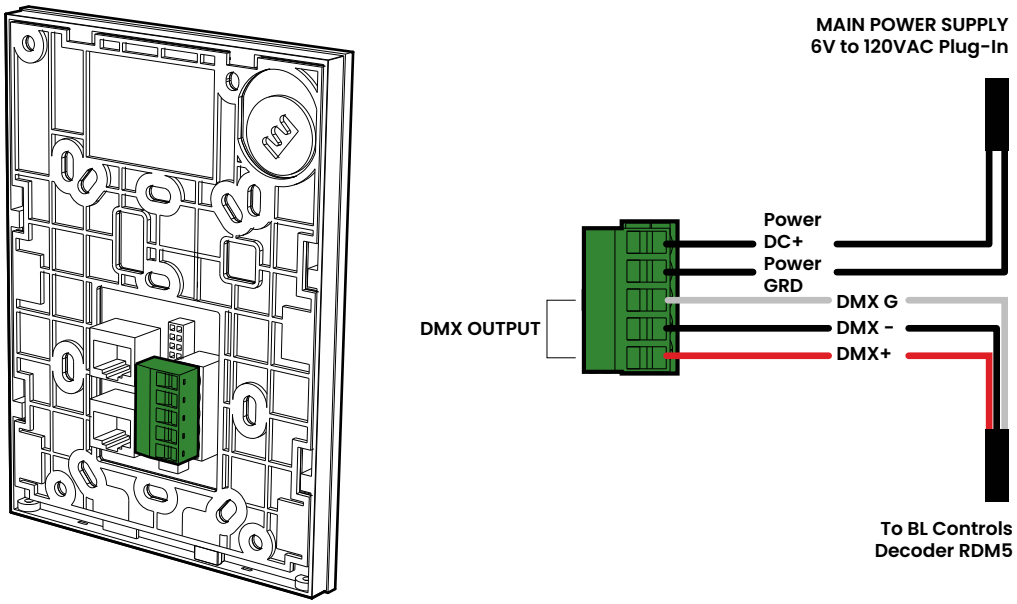

Copyright © BL INNOVATIVE LIGHTING. All Rights Reserved.

Solid State Lighting is sensitive to power fluctuations. Surge protection is highly recommended for all LED lighting products and should be on a dedicated circuit to protect against premature failure. Lack of surge protection may void your warranty.

Designed & Assembled in North America.

Specifications subject to change without notice. Please refer to our website at bllighting.com for current technical data.

For more information, please download the BL LIGHTING catalog

bllighting.com