BL neonVIEW

Diffused, Flexible, Linear LED Lighting
Side Profile, 120VAC

LINE SIDE

Printed Jul.6.2021

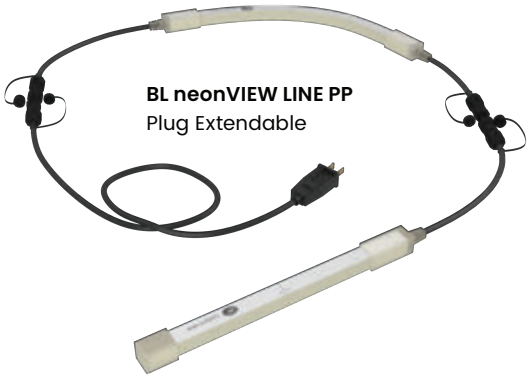

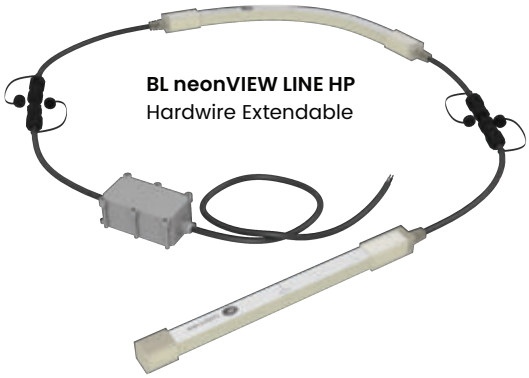

Certification

IP65 LINE

Lighting

2200K 2700K 3000K 3500K 4000K 5700K Red Green Blue

Lamp	LED, SMD 5050
# of LEDs	27/FT (84/m)
Power	3.05 W/FT (10 W/m)
Beam Angle	120°
Average Life	50,000 Hours
Lumens	25 - 177 lm/FT
Efficacy	8 - 58 lm/W

Electrical

Input Voltage	120VAC
Connections	Hard-wired (HP), Male Plug-in Connector (PP)
Operating Temperature	-4°F to 113°F (-20°C to 45°C)

Mechanical

Housing Construction	Injection Moulded White PVC
Cutting Increments	* 3-9/32" (83.3mm) - 4-56/64" (125mm)
Maximum Run Length	* 3-9/32" (83.3mm) - 130FT (40m)
Medial Bend Radius	300mm (11-13/16")
Environmental	IP65
Mounting	Clip, Track
Connection	Factory installed, injection molded

Accessories

BL neonVIEW LINETKE	** Hard-wired termination Kit (Requires LINETKF)
BL neonVIEW LINETKF	Fuse box and power lead
BL neonVIEW LINETKP	** Plug-in Termination Kit, Factory Installed
BL neonVIEW LINEJC	Jumper Cable, Factory Installed
NVCP	Surface Mounting Clip
NVMCH	Surface Mounting Channel

* Please refer to the performance table on the following page

**Multiple Lead Orientation options available

PROJECT | CLIENT | TYPE

Solid State Lighting is sensitive to power fluctuations
Surge protection is highly recommended for all LED lighting products and should be on a designated circuit to protect against premature failure
Lack of surge protection may void your warranty

For more information, please download the **BL LIGHTING** catalogue

BL LIGHTING. ILLUMINATE EVERYTHING
111 - 8838 Heather St. Vancouver, BC. Canada. V6P 3S8
P: 1-604-874-4405 F: 1-604-321-0445 E: info@bllighting.com
Copyright © 2017 BL INNOVATIVE LIGHTING. All Rights Reserved.

bllighting.com

BL LIGHTING
SINCE 1986

BL neonVIEW

Diffused, Flexible, Linear LED Lighting
Side Profile, 120VAC

LINE SIDE

Printed Jul.6.2021

Performance

CCT/Color	Power	Lumens	Efficacy	Cutting Increments
2200K	3.05 W/FT	121 lm/FT	40 lm/W	3-9/32 in (83.3mm)
2700K	3.05 W/FT	150 lm/FT	49 lm/W	3-9/32 in (83.3mm)
3000K	3.05 W/FT	148 lm/FT	49 lm/W	3-9/32 in (83.3mm)
3500K	3.05 W/FT	148 lm/FT	49 lm/W	3-9/32 in (83.3mm)
4000K	3.05 W/FT	150 lm/FT	49 lm/W	3-9/32 in (83.3mm)
5700K	3.05 W/FT	146 lm/FT	48 lm/W	3-9/32 in (83.3mm)
Red	3.05 W/FT	83 lm/FT	27 lm/W	4-59/64 in (125mm)
Green	3.05 W/FT	177 lm/FT	58 lm/W	3-9/32 in (83.3mm)
Blue	3.05 W/FT	25 lm/FT	8 lm/W	4-59/64 in (125mm)

Ordering

Series	CCT/Color	Lead Orientation	Connector	Mounting Accessories
BL neonVIEW LINE SIDE	.	.	.	.

CCT/Color
- **22** = 2200K
- **27** = 2700K
- **30** = 3000K
- **35** = 3500K
- **40** = 4000K
- **57** = 5700K
- **RD** = Red
- **GN** = Green
- **BE** = Blue

Lead Orientation
- **LINETKBC** = Back Lead
- **LINETKEC** = End Lead
- **LINETKRC** = Right Side Lead
- **LINETKLC** = Left Side Lead

Connector
- **HP** = Hardwire Power Cable
- **PP** = Plugin Power Cable

Mounting Accessories
- **NVCP** = Mounting Clip
- **NVMCH** = Mounting Channel
- **NVRMC** = Recessed Mounting Clip
- **NVRMCH** = Recessed Mounting Channel

Lead Orientation

Back Lead
Part# **LINETKBC**

End Lead
Part# **LINETKEC**

Right Side Lead
Part# **LINETKRC**

Left Side Lead
Part# **LINETKLC**

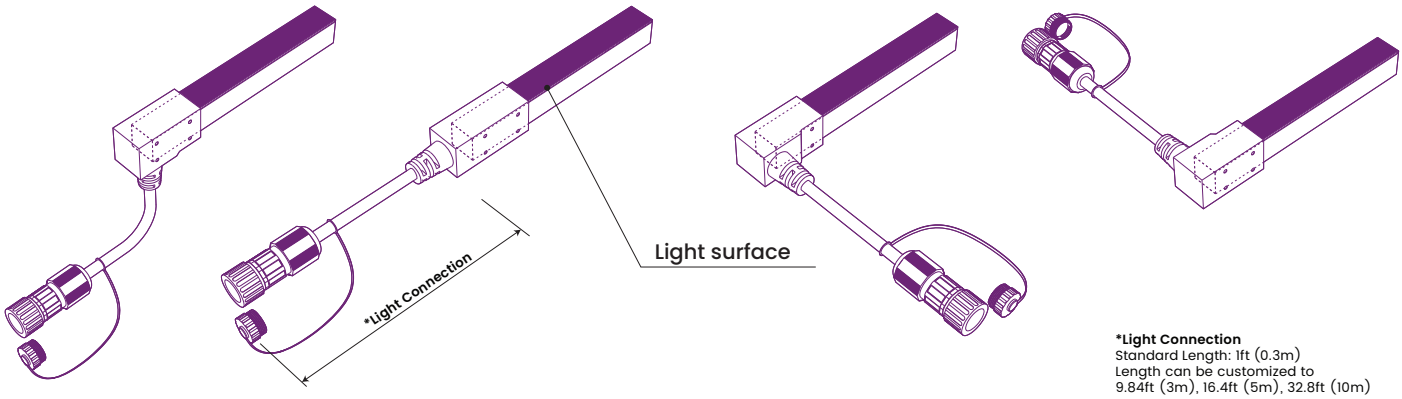

***Light Connection**
Standard Length: 1ft (0.3m)
Length can be customized to
9.84ft (3m), 16.4ft (5m), 32.8ft (10m)

PROJECT		CLIENT		TYPE	

Solid State Lighting is sensitive to power fluctuations
Surge protection is highly recommended for all LED lighting products and should be on a designated circuit to protect against premature failure
Lack of surge protection may void your warranty

For more information, please download the **BL LIGHTING** catalogue

BL LIGHTING. ILLUMINATE EVERYTHING
111 - 8838 Heather St. Vancouver, BC. Canada. V6P 3S8
P: 1-604-874-4405 F: 1-604-321-0445 E: info@bllighting.com
Copyright © 2017 BL INNOVATIVE LIGHTING. All Rights Reserved.

bllighting.com

BL neonVIEW

Diffused, Flexible, Linear LED Lighting
Side Profile, 120VAC

LINE SIDE

Printed Jul.6.2021

Connection Options

BL neonVIEW LINE PP
Plug Extendable

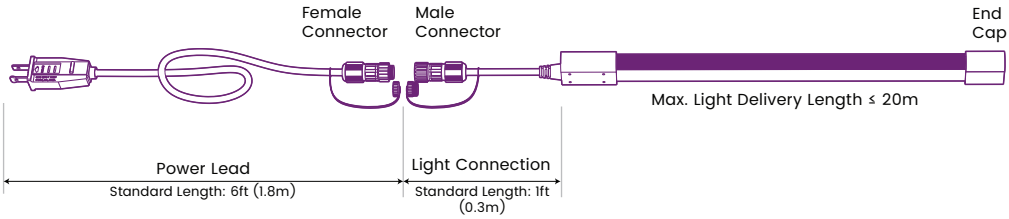

Power Lead
Standard Length: 6ft (1.8m)
Length can be customized to
9.84ft (3m), 16.4ft (5m), 32.8ft (10m)

BL neonVIEW LINE HP
Hardwire Extendable

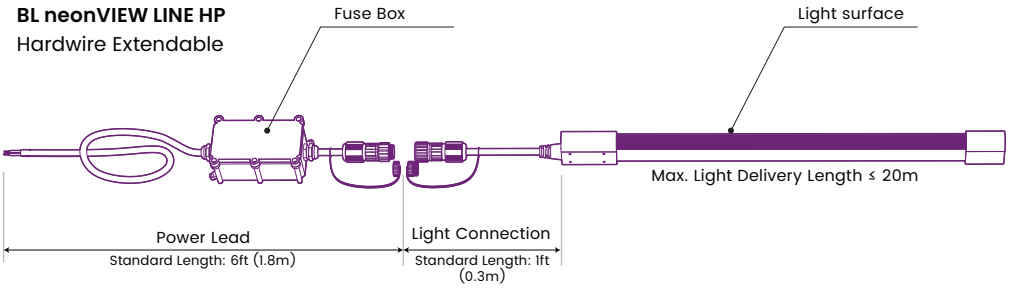

Light Connection
Standard Length: 1ft (0.3m)
Length can be customized to
9.84ft (3m), 16.4ft (5m), 32.8ft (10m)

Extended Segment - Up to 130ft (40m)

BL neonVIEW LINE PP
Plug Extendable

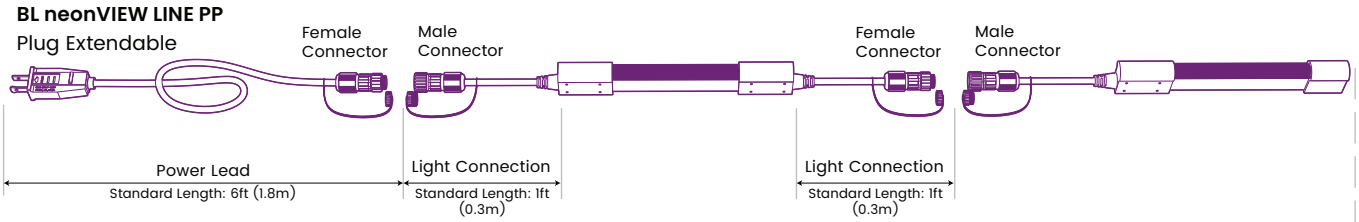

Up to 130ft (40m)

BL neonVIEW LINE HP
Hardwire Extendable

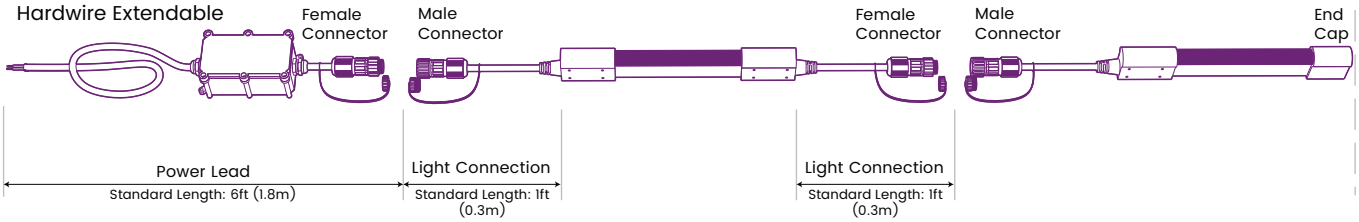

PROJECT	CLIENT	TYPE

Solid State Lighting is sensitive to power fluctuations
Surge protection is highly recommended for all LED lighting products and should be on a designated circuit to protect against premature failure
Lack of surge protection may void your warranty

For more information, please download the **BL LIGHTING** catalogue

BL LIGHTING. ILLUMINATE EVERYTHING
111 - 8838 Heather St. Vancouver, BC. Canada. V6P 3S8
P: 1-604-874-4405 F: 1-604-321-0445 E: info@bllighting.com
Copyright © 2017 BL INNOVATIVE LIGHTING. All Rights Reserved.

bllighting.com

BL neonVIEW

Diffused, Flexible, Linear LED Lighting
Side Profile, 120VAC

LINE SIDE

Printed Jul.6.2021

Minimum Bend Radius and Bend Orientations

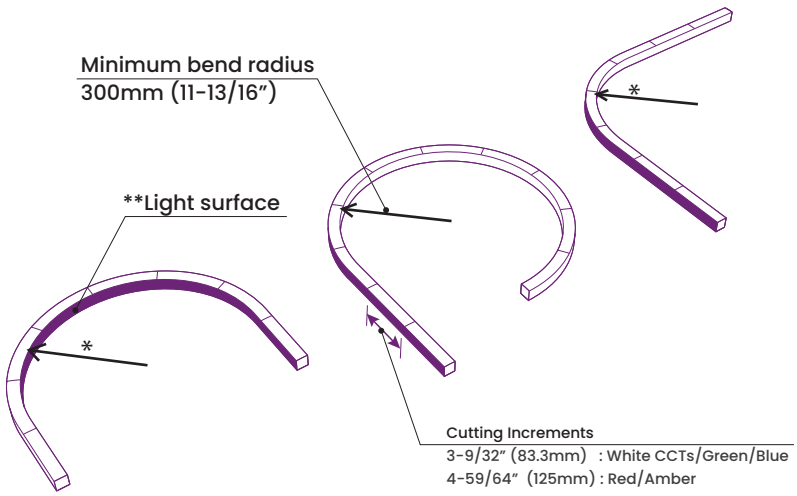

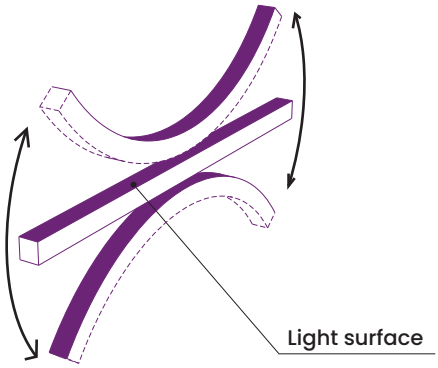

**Light surface could be inside or outside.

BL neonVIEW LINE SIDE Series bends vertically
*Horizontal bend option available on
BL neonVIEW LINE DOME and FLAT Series

Dimensions

Power Plugin

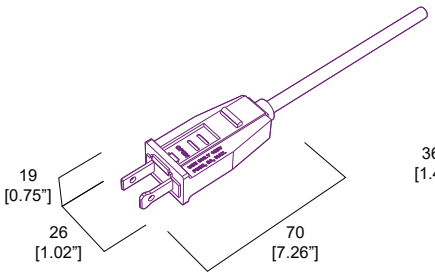

Fuse Box

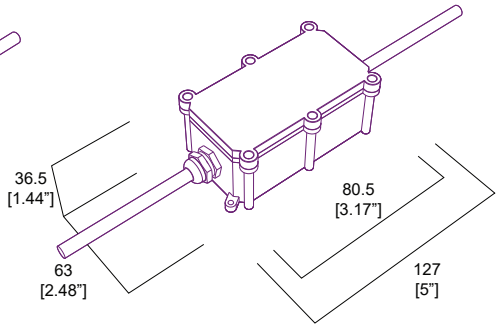

Male, Female Connectors

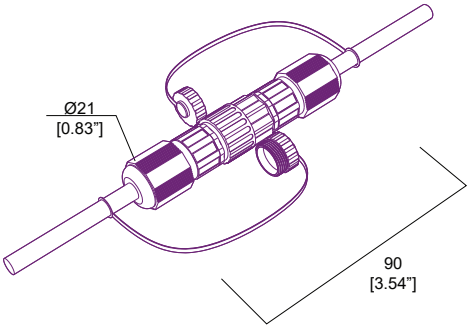

PROJECT	CLIENT	TYPE

Solid State Lighting is sensitive to power fluctuations
Surge protection is highly recommended for all LED lighting products and should be on a designated circuit to protect against premature failure
Lack of surge protection may void your warranty

For more information, please download the **BL LIGHTING** catalogue

BL LIGHTING. ILLUMINATE EVERYTHING
111 - 8838 Heather St. Vancouver, BC. Canada. V6P 3S8
P: 1-604-874-4405 F: 1-604-321-0445 E: info@bllighting.com
Copyright © 2017 BL INNOVATIVE LIGHTING. All Rights Reserved.

bllighting.com

BL neonVIEW

Diffused, Flexible, Linear LED Lighting
Side Profile, 120VAC

LINE SIDE

Printed Jul.6.2021

Dimensions

Back Lead
Part# LINETKBC

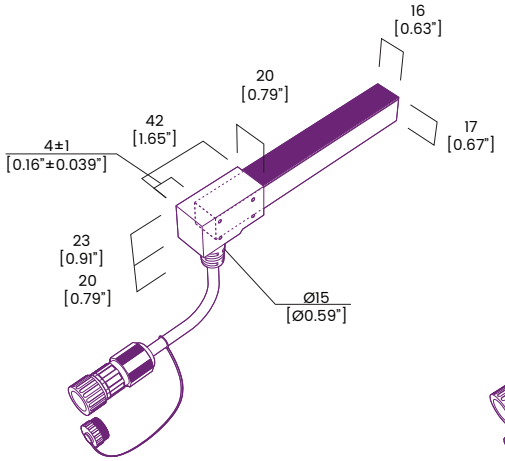

End Lead
Part# LINETKEC

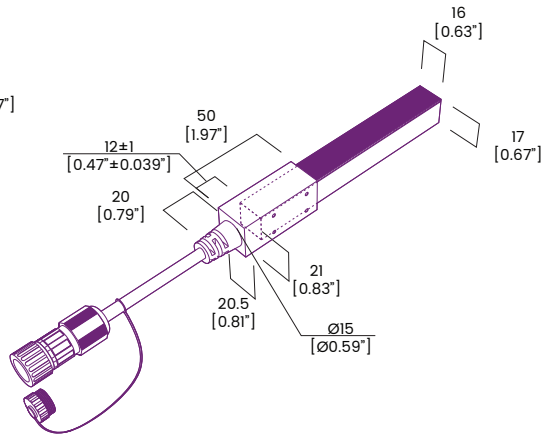

End Cap

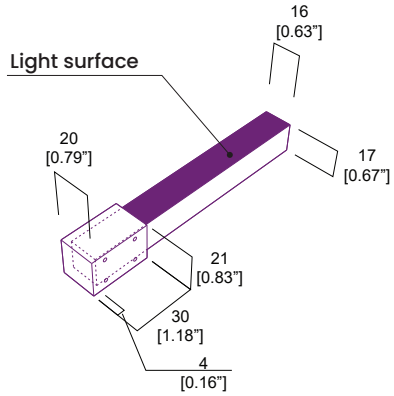

Right Side Lead
Part# LINETKRC

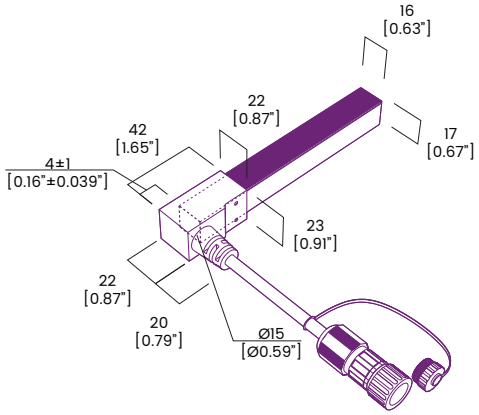

Left Side Lead
Part# LINETKLC

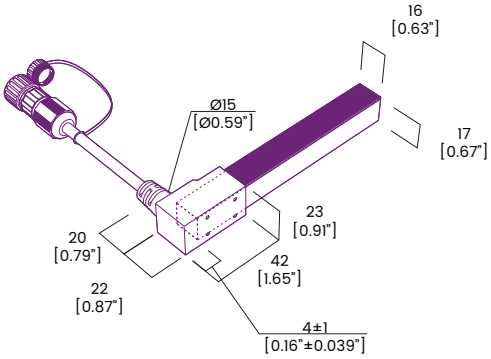

PROJECT	CLIENT	TYPE

Solid State Lighting is sensitive to power fluctuations
Surge protection is highly recommended for all LED lighting products and should be on a designated circuit to protect against premature failure
Lack of surge protection may void your warranty

For more information, please download the **BL LIGHTING** catalogue

BL LIGHTING. ILLUMINATE EVERYTHING
111 - 8838 Heather St. Vancouver, BC. Canada. V6P 3S8
P: 1-604-874-4405 F: 1-604-321-0445 E: info@bllighting.com
Copyright © 2017 BL INNOVATIVE LIGHTING. All Rights Reserved.

bllighting.com

BL neonVIEW

Diffused, Flexible, Linear LED Lighting
Side Profile, 120VAC

LINE SIDE

Printed Jul.6.2021

Accessories (Surface Mounting Clip and Channel)

Surface Mounting Clip

Part# NVSCP

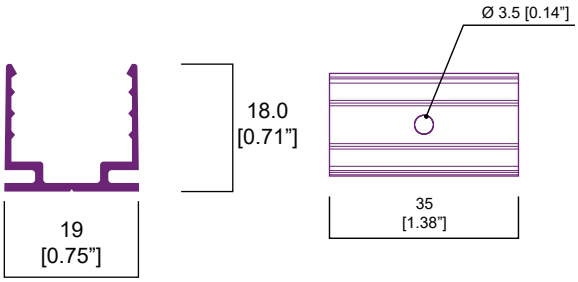

Surface Mounting Channel

Part# NVSMCH

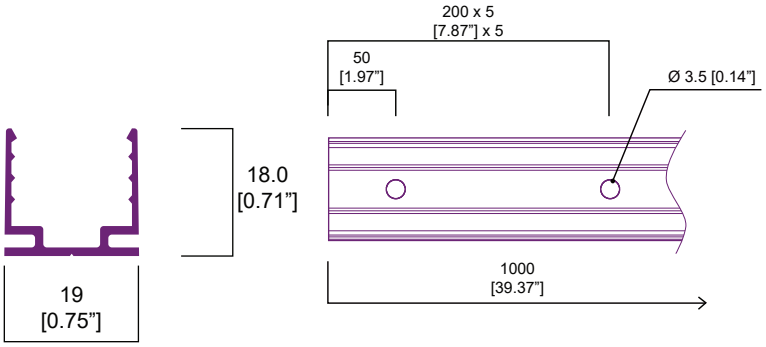

For more detail, please download the CAD Drawing

PROJECT		CLIENT		TYPE	

Solid State Lighting is sensitive to power fluctuations
Surge protection is highly recommended for all LED lighting products and should be on a designated circuit to protect against premature failure
Lack of surge protection may void your warranty

For more information, please download the **BL LIGHTING** catalogue

BL LIGHTING. ILLUMINATE EVERYTHING
111 - 8838 Heather St. Vancouver, BC. Canada. V6P 3S8
P: 1-604-874-4405 F: 1-604-321-0445 E: info@bllighting.com
Copyright © 2017 BL INNOVATIVE LIGHTING. All Rights Reserved.

bllighting.com

BL neonVIEW

Diffused, Flexible, Linear LED Lighting
Side Profile, 120VAC

LINE SIDE

Printed Jul.6.2021

Accessories (Recessed Mounting Clip and Channel)

Recessed Mounting Clip

Part# NVSRMC

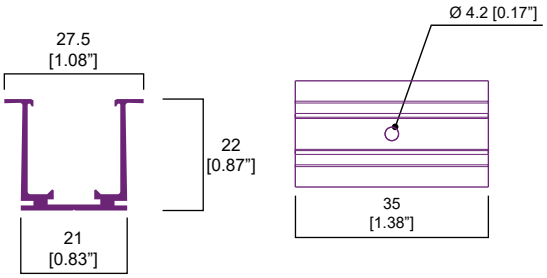

Recessed Mounting Channel

Part# NVSRMCH

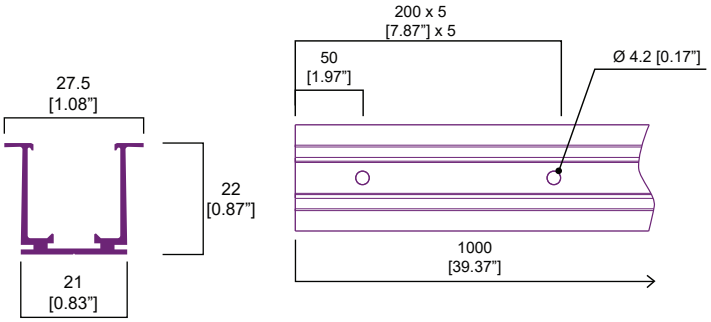

For more detail, please download the CAD Drawing

PROJECT		CLIENT		TYPE	

Solid State Lighting is sensitive to power fluctuations
Surge protection is highly recommended for all LED lighting products and should be on a designated circuit to protect against premature failure
Lack of surge protection may void your warranty

For more information, please download the **BL LIGHTING** catalogue

BL LIGHTING. ILLUMINATE EVERYTHING
111 - 8838 Heather St. Vancouver, BC. Canada. V6P 3S8
P: 1-604-874-4405 F: 1-604-321-0445 E: info@bllighting.com
Copyright © 2017 BL INNOVATIVE LIGHTING. All Rights Reserved.

bllighting.com