BL neonVIEW BRIGHT SIDE SI SC L3

Diffused, Flexible, Linear LED Lighting, 24VDC, Constant Voltage, Vertical Bend, Bright Side Profile, Silicone, Single Color

BL LIGHTING SINCE 1986

BL neonVIEW BRIGHT SIDE SI SC L3 with a wider profile lens delivers over 290 lm/ft of dot-free, uniform illumination. The unique vertical bending direction curves across the top of the flat light surface and is perfect for circles, contours and side-emitting light. The flexible, square shaped Silicone encapsulated diffuser shines a vivid line of light with a 120° beam distribution. Rated for a range of operating temperatures from -40° F to 131° F (-40° C to 55° C) and built with IP68 wet location rated injection molded terminations for sustained ability to weather the elements in extreme environmental conditions.

Dot-free | **Seamless connections** | **-40°F to 131°F (-40°C to 55°C)**

CLIENT	
PROJECT NAME	
LOCATION	
DATE	

Product Detail

IP68 | LOW | DIM | Bluetooth | 5 YEAR WARRANTY

CE | RoHS | c UL us LISTED | SOLVENTS RESISTANT | UV SHIELD

FLAME RESISTANT | SALT WATER RESISTANT | IK10 PROTECTION | 3G VIBRATION RATING

Lighting	Lamp	LED, SMD 2835
	LED's Per Foot	43 LEDs/ft (140 LEDs/m)
	Beam Angle	120°
	Average Life	50,000 Hours
Electrical	Controls	0-10V, MLV, ELV, Phase-Cut, Triac, DMX, Bluetooth
	Input Voltage	24VDC
	Max Input Current	4.12A (White)
	Connections	18AWG, Copper Conductors
	Power Cable Length	Standard 10ft (3m). Also available in 16ft (5m) and 32ft (10m)
	Circuit	Class 2
Mechanical	Housing Construction	Injection Moulded White Silicone
	Minimum Bend Radius	5.9" (150mm)
Environmental	Operating Temperature	-40°F to 131°F (-40°C to 55°C)
	Ingress Protection	IP68
	Impact Protection	IK10
	Vibration Rating	3G
	Resistance	UV, Flame, Solvents and Saltwater Resistant
	Certifications	cULus, CE, RoHS Compliant

Performance

CCT/Color		**2200K**	**2700K**	**3000K**	**3500K**	**4000K**	**5700K**
Power	W/FT (W/m)	3.66 (12)					
Lumens	lm/FT (lm/m)	274 (900)	280 (920)	280 (920)	290 (950)	290 (950)	290 (950)
Efficacy	lm/W	75	77	77	79	79	79
CRI	CRI	80					
Increment	inch (mm)	1.97 (50)					
Max. Length	ft (m)	24ft 6in (7.5m)					

Ordering

Product Code	CCT	Lead Orientation		Mounting Accessories*	
BL neonVIEW BR SL SI L3 VB					
	2200K	NVS BRSL BC 68	= Back Lead	NVBRSL VB CPS	= Mounting Clip
	2700K	NVS BRSL EC 68	= End Lead	NVBRSL VB CHS	= Mounting Channel
	3000K	NVS BRSL RC 68	= Right Side Lead	NVBRSL VB RCPS	= Recessed Mounting Clip
	3500K	NVS BRSL LC 68	= Left Side Lead	NVBRSL VB RCHS	= Recessed Mounting Channel
	4000K				
	5700K				

BL LIGHTING
ILLUMINATE EVERYTHING

111 - 8838 Heather St. Vancouver, BC. Canada. V6P 3S8
P: 1-604-874-4405 E: info@bllighting.com

Solid State Lighting is sensitive to power fluctuations. Surge protection is highly recommended for all LED lighting products and should be on a dedicated circuit to protect against premature failure. Lack of surge protection may void your warranty.

Designed & Assembled in North America.

Specifications subject to change without notice. Please refer to our website at bllighting.com for current technical data.

For more information, please downlad the BL LIGHTING catalog

bllighting.com

Minimum Bend Radius and Bend Orientation

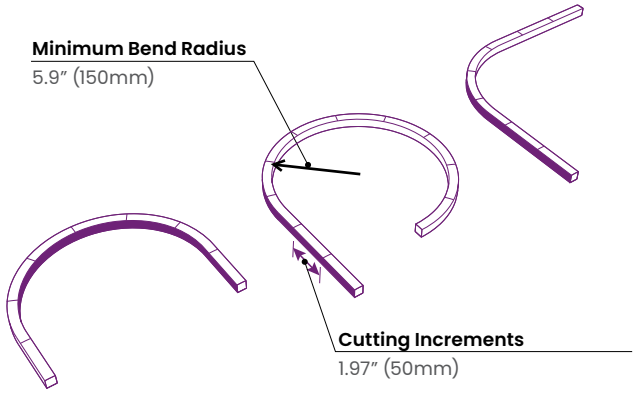

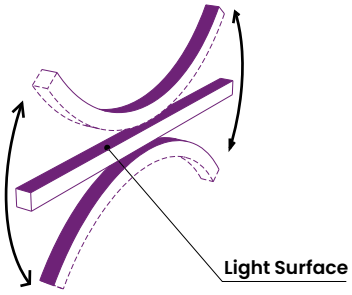

BL neonVIEW Bright SIDE Series bends vertically
Horizontal bend option also available (HB Version)

Dimensions & Lead Orientations

Back Lead

NVS BRSL BC 68

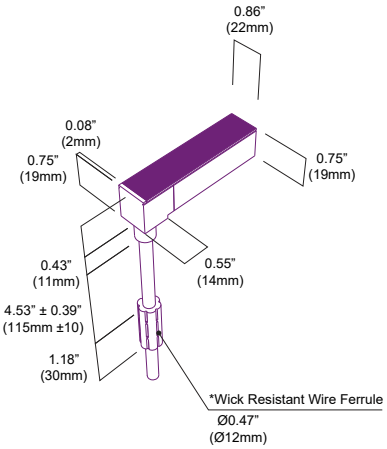

End Lead

NVS BRSL EC 68

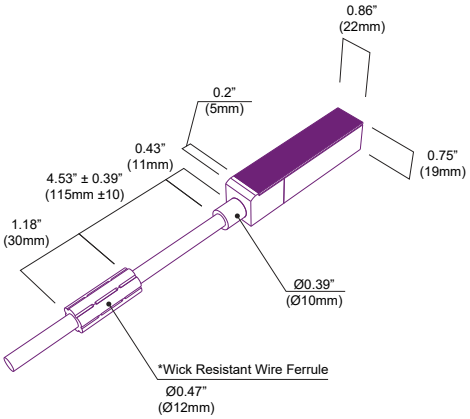

End Cap

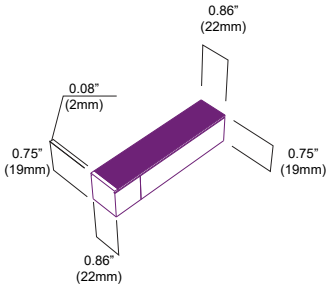

Right Side Lead

NVS BRSL RC 68

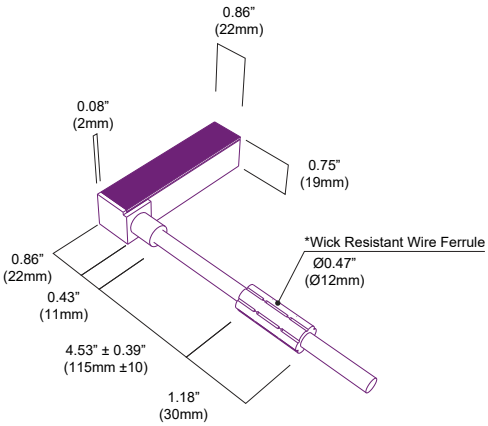

Left Side Lead

NVS BRSL LC 68

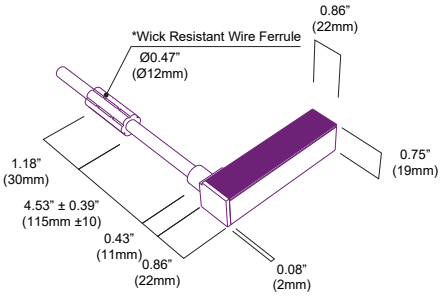

** The Wick Resistant Wire Ferrule is built into the lead wire, 4.5" (115mm) from the BL neonVIEW Termination Connection, for additional moisture ingress protection. Removal of the Wick Resistant Wire Ferrule may void your warranty.*

Solid State Lighting is sensitive to power fluctuations. Surge protection is highly recommended for all LED lighting products and should be on a dedicated circuit to protect against premature failure. Lack of surge protection may void your warranty.

Designed & Assembled in North America.

Specifications subject to change without notice. Please refer to our website at bllighting.com for current technical data.

For more information, please downlad the BL LIGHTING catalog

bllighting.com

Beam Angle

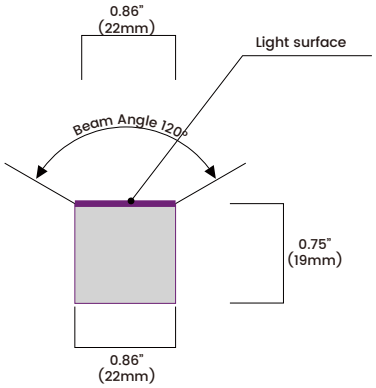

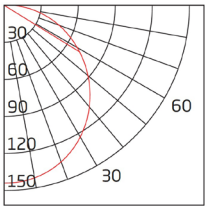

Unit: cd
— C90/270

Average Beam Angle (50%): 111.2°

TM-30

CCT	CRI	Rf	Rg
3000K	80	84	97

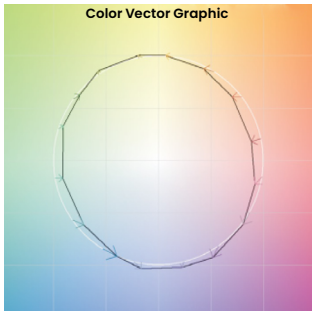

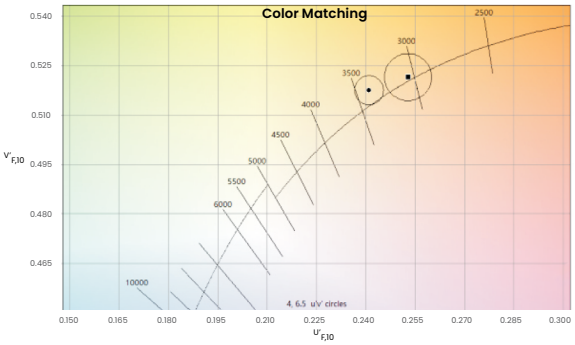

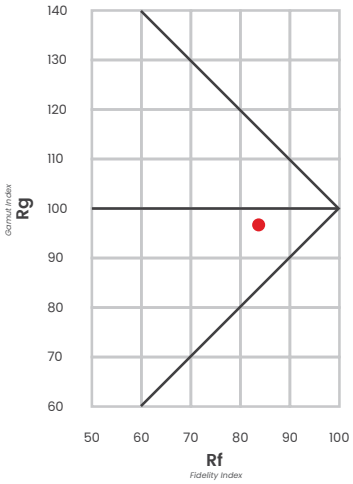

All results in accordance with ANSI C78.377 standard

Solid State Lighting is sensitive to power fluctuations. Surge protection is highly recommended for all LED lighting products and should be on a dedicated circuit to protect against premature failure. Lack of surge protection may void your warranty.

Designed & Assembled in North America.

Specifications subject to change without notice. Please refer to our website at bllighting.com for current technical data.

For more information, please downlad the BL LIGHTING catalog

bllighting.com